深圳市龙桥科技发展有限公司

SHENZHEN DRAGON BRIDGE TECHNOLOGYLIDE COMPANY

Application :Rental cars, insurance cars, trucks, buses

Wireless Fleet management Solution Innovator

GSM/GPRS/GPS Tracker

User Manuel

LTS-100D

ROADRAGON®

路特龙

Content

Product overview

- LTS-100D is a special positioning product
- Switchable between wired and wireless
- Built-in 5200mAh polymer lithium battery, use real-time positioning under the condition of wiring.
- Support satellite positioning, AGPS positioning, base station positioning, etc.
- Communication support: GSM and GPRS.
- Expansion interface, can be connected to tire pressure sensor, load sensor, door sensor, pressure switch, etc.
- Support remote firmware upgrade.
- Support multiple protocols, compatible with multiple standard platforms.
- IP68 highest level waterproof.

Product Features

2.1 basic skills

2.1.1 Positioning monitoring

It includes functions such as timing return, blind spot compensation, speed and mileage statistics, and regional monitoring. The system issues positioning commands, and the terminal returns data including longitude, latitude, speed, direction, and status information.

2.1.2 Regular monitoring

The vehicle-mounted satellite positioning terminal can set a certain moment or a certain period of time or send the vehicle's position and status information to the monitoring center at certain time intervals.

2.1.3 Blind spot compensation

When the terminal enters the GPRS blind area, the track data will be saved at the set time interval, and the blind area data will be uploaded to the platform when the GPRS is back online. Up to 4000 pieces of blind spot compensation data can be saved.

2.1.4 corner compensation

When the vehicle enters the curve, the terminal detects that there is a certain angular deviation in the driving direction (default 20 degrees), and will add a regular return message to ensure that the driving trajectory is more accurate.

2.1.5 Base station positioning

The terminal uses satellite positioning by default. When it enters the signal blind area and cannot be accurately positioned, the terminal automatically switches to base station positioning. The terminal obtains base station information every 30S, uploads the base station information, and the specific

location is analyzed by the server.

2.1.6 Main power detection

The terminal detects the main voltage in real time. When the battery voltage on the vehicle is too low, the vehicle terminal reports a low voltage alarm to the monitoring center.

2.1.7 Overspeed alarm

When the vehicle speed is higher than the overspeed alarm value, the vehicle terminal will notify the monitoring center.

2.1.8 Main power failure alarm

When the main battery of the vehicle is damaged or cannot supply power, the built-in backup power supply can keep the system working and send a power failure alarm to the monitoring center.

2.1.9 Built-in battery

The terminal has a built-in large-capacity high-temperature lithium battery, which can detect the battery power in real time and report the battery power in real time. When the built-in battery is working, the terminal has a variety of working states, which can support the terminal to work continuously for no less than 7 days.

2.1.10 fast charge

The terminal has a fast charging function. When the main power is available, the built-in battery can be quickly charged through the fast charging module.

2.1.11 Power saving function

The terminal has a built-in G-Sensor, which can automatically detect the current state of the device and distinguish whether it is in motion mode or static mode; when the terminal is in the static mode for a period of time, the terminal can automatically enter the power saving mode, and the uploaded

data will be converted to heartbeat return; After the G-Sensor detects in real time that it enters the sports mode, the terminal immediately exits the power saving mode and enters the normal working state.

2.1.12 Intelligent self-test

The in-vehicle terminal can perform self-diagnosis. Once a fault occurs, it will send a fault notification to the center, such as GPS, GSM, etc., and can automatically take relevant measures. The monitoring center can also query the current model, version, configuration, running status and device function of the terminal.

2.1.13 Remote settings

Remotely set various parameters of the terminal through the central system, including IP, central number, various monitoring parameters, etc.

2.1.14 Remote upgrade（FOTA）

As long as the GPRS status of the terminal is available, the terminal firmware upgrade can be completed in a remote wireless manner.

2.1.15 Multilink

The terminal supports dual-IP dual-link connection between the primary server and the backup server. The primary server and backup server can be set in two ways: IP or domain name.

2.2 extensions

2.2.1 Tire pressure detection

The terminal can be connected to a tire pressure detector to detect tire pressure information in real time and send it to the background. The terminal can judge the tire pressure status in real time. Once abnormal tire pressure is found, the tire pressure alarm can be notified in real time.

2.2.2 Status detection

The terminal supports 2-way I/O detection, one high-level input and one low-level input, which can be used to detect vehicle state quantities. Such as unpacking doors, loading containers, hooking up trucks, etc.

2.2.3 output control

The terminal supports 1 channel of I/O output, low level output, which can be used to connect a channel of controller.

2.2.4 AD detection

The terminal supports 2 channels of AD signal input, the voltage range is 0~5V, and can be used for 2 channels of analog detection.

technical parameter

3.1 Electrical parameters

Product Features	specific description
Operating Voltage	DC 9V~36V, suitable for 12V/24V vehicles
Working current	Average current <100mA@12V
Main power sleep current	<15mA@12V
battery sleep current	<300uA@3.7V (long standby mode)
Built-in battery	Lithium polymer battery, capacity 3.7V/5200mAH
Charge	Built-in battery supports fast charging
communication system	2G:GSM/GPRS 850/900/1800/1900MHz
positioning mode	Support Beidou/GPS dual-mode positioning, AGPS assisted positioning and LBS positioning
Antenna built-in	Built-in GSM antenna and positioning antenna
data storage	4MB FLASH (different capacity optional)
I/O interface	2 input, 1 output
AD interface	2-channel ADC input, input voltage 0~5V
UART interface	Two RS232 and one RS485
Remote upgrade	Support remote FOTA firmware upgrade
wake up from sleep	Timing wake-up, open box alarm wake-up
Open box alarm	Support disassembly wake-up alarm
Multilink	Support multi-IP multi-link simultaneous connection
physical dimension	120mm*70mm*50mm
temperature range	Working temperature: -25℃~70℃; Storage temperature: -40℃～+85℃;
Protection class	IP68

3.2 Product configuration

basic configuration	
name	**describe**
host	1PCS
3P power cord	1PCS
manual	1PCS
Warranty Card	1PCS
certificate	1PCS
Optional accessories	
door sensor	
tire pressure	
temperature sensing	
Humidity Sensing	

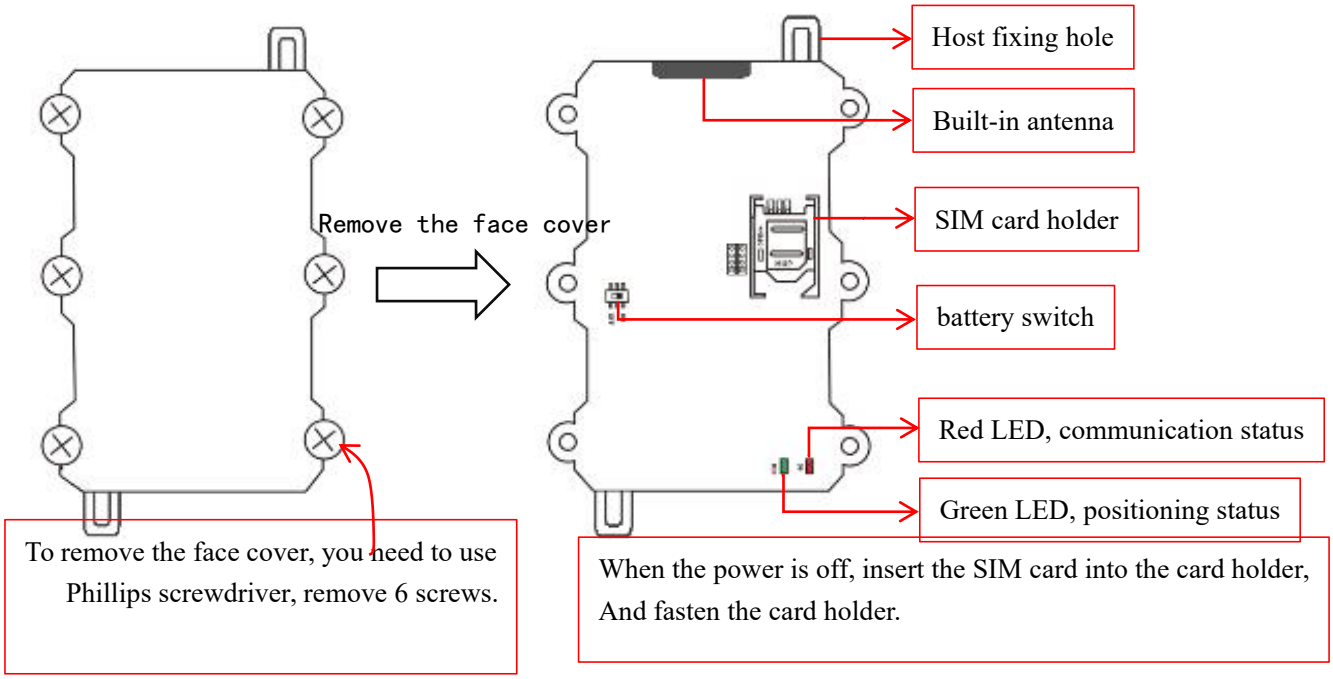

Installation Notes

4.1 install equipment

4.1.1 Open the cover to install the SIM card

Definition of indicator light:

Red communication status LED light: flashing quickly, GPRS network dialing.

It flashes slowly every 5 seconds and is online.

Green positioning status LED light: flashes quickly, the base station is positioned.

Steady on, it has been positioned.

Not lit, not positioned.

4.1.2 Harness Definition and Wiring

The device uses a car-grade waterproof connector (DJ70xxY) and a bellows protective sleeve by default, which can effectively protect the wiring harness and ensure the stability of the link.

Equipment wiring instructions:

3P power plug: Including the positive and negative wire harness of the power supply, when installing the wiring, it should be connected with the trailer power cord.

4P communication plug： The default is RS232 serial communication interface, which provides 5V power output, which can supply power for external sensors. It can be used to connect peripherals such as tire pressure sensor, humidity sensor, temperature sensor, etc. Note: This interface is a multiplex communication port, which can extend up to 2 channels of RS232/1 channel of 485 communication.

6P I/O port plug: Provides 2 AD input signal lines, 2 I/O input signal lines and 1 I/O output signal line. It can be used to collect analog signals, connect external controllers and collect switch signals.

4.2 parameter settings

4.2.1 Set IP port

Note: The terminal has a built-in ID number, and the customer's IP port can be preset at the factory, and generally no parameter setting is required. If you need to modify the IP, set it according to the following instructions. The following two methods require the SIM card to activate the SMS function.

For example, the client's server IP is: 119.23.233.52, port number: 6000.

① TCP connection mode, use SMS to write: *88*1119023233052*6000*1#, send to the local number, the terminal will reply: set ok, then the setting is successful.

② UDP connection mode, write: *88*1119023233052*6000*0#, send to the local number, the terminal will reply: set ok, then the setting is successful.

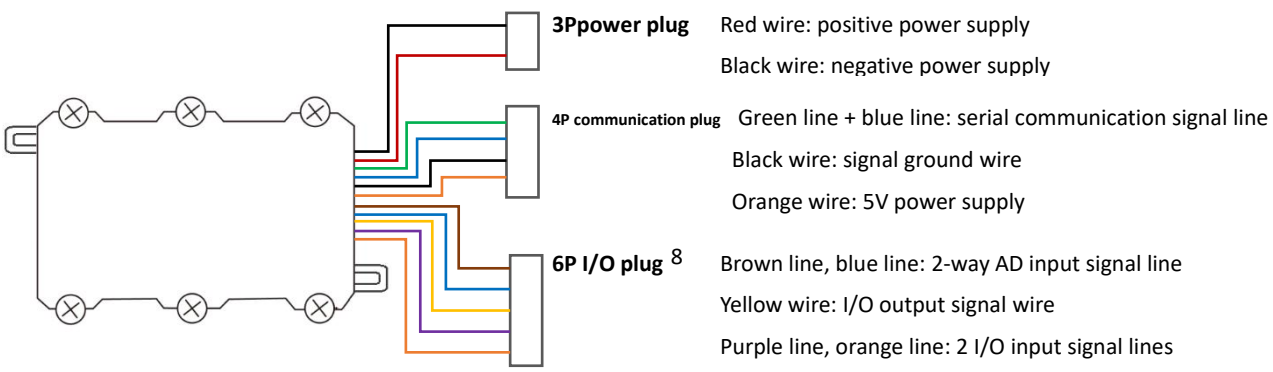

After completing the above settings, the terminal can be connected to the server, the device indicator light is solid green or flashing, and the red light is flashing slowly, indicating that the terminal has been online and positioned normally. At this point, cover the top cover and tighten the screws to fix the device to the trailer for use.

4.2.2 Set postback interval

Instruction format：HC,T1,T2,T3#
Instruction Description:
T1: Start the return interval, the value range is 5-1800 seconds, the default is 30 seconds
T2: Interval between flameout and return, the value range is 5-1800 seconds, the default is 120 seconds
T3: Sleep return interval, the value range is 15-21600 seconds, the default is 180 seconds

Example: HC,60,180,300# Set T1/T2/T3 to 60 seconds, 180 seconds, 300 seconds respectively

Use Note:

It is strictly forbidden to use the equipment not in accordance with the operating instructions, unauthorized disassembly, collision, charging, soaking in water, exceeding 80°C, human failure, force majeure damage, etc., otherwise the resulting short circuit, insufficient working time, battery deformation, leakage, explosion, etc. No warranty or compensation for consequential losses.

4. 3 Installation location

LTS-100D is designed to meet the IP68 protection standard and can be installed and fixed in exposed environments. Usually, it can be fixed at the position marked in the figure below, and the equipment line is routed along the original vehicle wiring harness.